GRID GEAR

GRIDGEAR SOLUTIONS LTD
17 FAWCETT RD. UNIT 340
COQUITLAM, BC V3K 6V2
INFO@GRIDGEAR.CA
+1.888.512.1392

GG2 SOLID STATE kWh METER FOR SUBMETERING

PRODUCT CODE: GG2

RATINGS AND ENVIRONMENTAL CONDITIONS

Wiring and distribution options	
Single Phase 2 Wire	120V to 277V (Line to Neutral)
Single Phase 3 Wire	120V (Line to Neutral) / 240V (Line to Line)
Single Phase 3 Wire	120V to 277V (Line to Neutral) / 208V to 480V (Line to Line)
3 Phase 4 Wire	120V to 277V (Line to Neutral) / 208V to 480V (Line to Line) TN or TT system only
Wiring Specifications	
60° C minimum, 18 AWG minimum, 600V minimum insulated wiring for CT connections. Line voltages and Neutral in accordance with all national and local electrical code requirements.	
18 AWG minimum, 600V minimum insulated copper conductor wiring, with a torque rating of 20 lb-in, for Line voltages and Neutral to the appropriate locations in the breaker panel, in accordance with all national and local electrical code requirements.	

UL listed	(***E489079***) as an open style meter for use with different enclosures	
Environment	Indoor use with UL approved NEMA enclosures	
Frequency	Rated for 50 Hz or 60 Hz systems	
Amperage	100mA max on CT secondary leads	
Altitude	up to 2000 meters	6562 feet
Temperature	-20° to 50° C	0° to 120° F
Humidity	Rated Relative Humidity: 80%	
Pollution	Rated Pollution Degree: 2	
Operating Power	1 VA	
Electrical Rating	Evaluated to Measurement Category III	
Warranty	10 year warranty on GridGear products when installed according to installation instructions	

TABLE OF CONTENTS

3 Safety Labels And Definitions
3 Product Description
4 Display Information
5 Locations and Materials
5 Enclosures
7 Current Transformers
8 Summary of Metering Conventions
9 Connection Diagrams
9 Single-Phase Two-Wire Connection
9 Single / Two-Phase Three-Wire Connection
10 Three-Phase Four-Wire Connection
11 Example MMU Installation
15 Example Flush and Surface Mount Installation
17 Troubleshooting
20 Frequently Asked Questions
21 GridGear Solutions Ltd. Product Warranty

SAFETY LABELS AND DEFINITIONS

Presence of this symbol indicates the danger of an electric shock hazard. Make sure all related circuits are de-energized before proceeding.

This label indicates that caution must be exercised and the manual should be consulted in order to minimize risk.

WARNING: The installation of electric meters involves working with possibly hazardous voltages, and therefore should only be performed by qualified electricians in accordance with up to date, local and national electric code requirements. All hazardous circuits are to be disconnected from power before servicing.

Failure to comply with relevant safety standards and protocols could result in serious injury or death.

PRODUCT DESCRIPTION

Front side of GG2 meter

Back side of GG2 meter

GridGear's GG2 meter is a flexible, low cost, revenue grade meter, for the residential, commercial, and industrial market. The meter is UL listed (E489079), ANSI C12.20, 0.5 accuracy class as tested by UL, and designed to provide accurate measurement and monitoring of electricity consumption when installed as per GridGear's specification.

The GG2 meter can be used to monitor energy consumption in 120V to 480V systems adaptively; without manual configuration. Multiple meters can be stacked within a single Multi-Meter-Unit enclosure in order to conserve space. The installation can be performed with relative ease and minimal disruption of service.

Prior to commencing the installation of the GG2 meter, please note that it is intended to be installed by a qualified electrician as per the codes and laws of the local and national governing entities. Take steps to ensure that all related circuits are de-energized before beginning the installation and take the time to read the installation instructions as well as plan out all of the appropriate connections. If the device is used, mounted, or connected in a manner not specified by GridGear, then its safeguards may be negatively impacted and the warranty may be void.

Do not open the meter or alter its interior or exterior components in any way.

DISPLAY INFORMATION

When the meter is powering up, its LCD display will list the following information one piece at a time in this order;

GG2	GridGear, the model number of the device
V #.#	Firmware version number
########	Active energy consumed in kilowatt hours (kWh)

The table below addresses other, noteworthy accronyms present on the device.

kWh	mA	CT	AC	DC
Kilowatt hours	MilliAmps	Current Transformer	Alternating Current	Direct Current

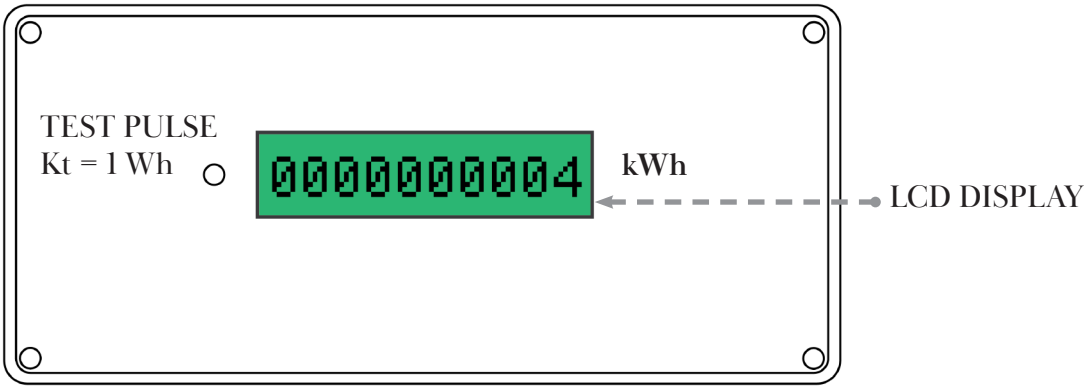

Simplified 2d representation of GG2 meter unit's front side

The test pulse refers to the inset LED light beside the LCD display. The light will flash green when the unit is operational and there is a load being monitored. The frequency of the blinking light corresponds with the kilowatt hours (kWh) read by the device. If the sum of current on both hot legs equals 1 amp, the light will blink once every 30 seconds (for a 120V system). Put another way, the LED will blink once for every watt hour or a thousand times for every kilowatt hour.

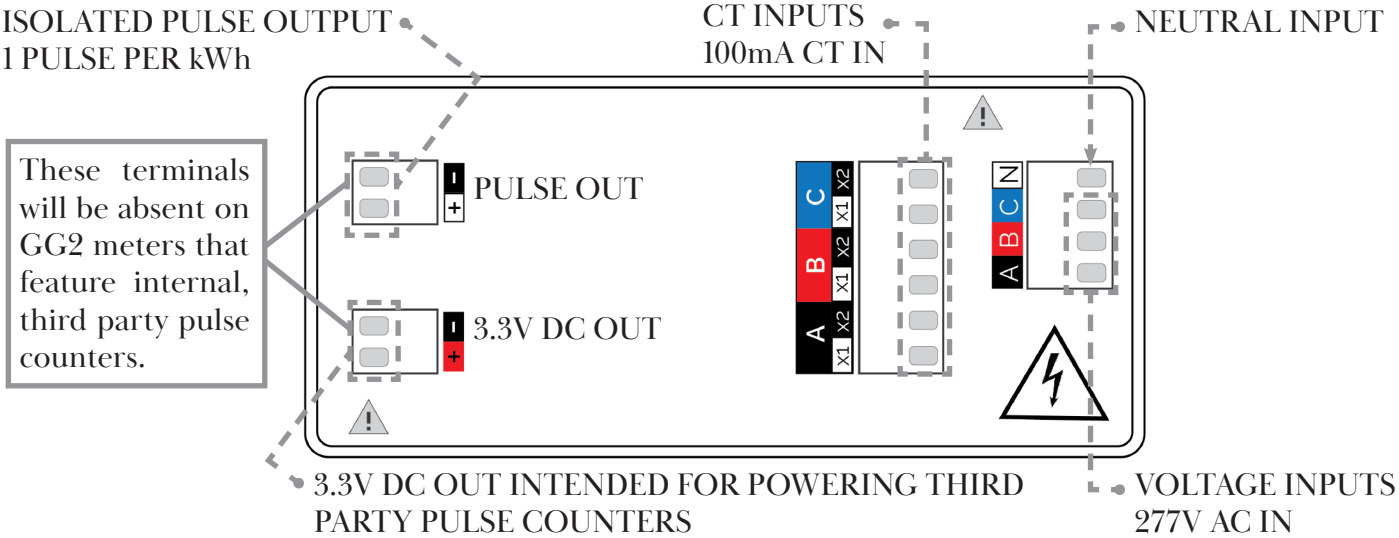

Simplified 2d representation GG2 meter unit's back side

DISPLAY INFORMATION CONTINUED

When taking advantage of the 3.3V DC outputs to power the meter's respective third party pulse counters, any wires or hardware connected to the terminal **MUST BE CONTAINED** within the same enclosure that the GG meter resides in. **All outputs are potentially hazardous, non-isolated live circuits.**

In order to maintain the UL certification, any wires or hardware that are connected to the Pulse Output and 3.3V terminal **MUST BE CONTAINED** within the enclosure that the meter is installed into.

The GG2 meter is classified as an open type device, and **MUST BE CONTAINED** within a suitable enclosure. The enclosure, in turn, must be certified by the National Institute of Standards and Technology (NIST) or governing regulatory body in the locality where the meter is being installed.

GridGear energy-monitoring equipment is not intended for retrofit field installation within the enclosure of switchgears/panel boards unless it has been specifically covered as an accessory by the switchgear/panel board listing.

LOCATIONS AND MATERIALS

GridGear recommends that the meters be installed in an adequately ventilated area near a breaker or distribution panel. The area should not exceed the temperature ratings or environmental conditions listed on page 2 of this document. Please ensure that each breaker or switch is appropriately labeled or visibly traceable to its associated connection. Make sure the mounted enclosure does not impede the operation of the breaker or distribution panel.

ENCLOSURES

Mounting hardware is provided with each enclosure. Multi-Meter Units may weigh as much as 55 lbs. or 25 kgs. A load bearing stud or backing should be used to accomodate any enclosure in excess of 5 lbs. or 2.5 kgs. The installer should be sure to use screws that are #8 gauge or higher and a minimum of 1.5" long. GridGear does not provide fasteners and is not liable for any damages that may result in the event that an inadequate fastener is used in the application of the product.

The enclosures below are tested, recommended and supplied by GridGear:

Flush Mount enclosure

Surface Mount enclosure

Multi-Meter Unit (MMU)

Enclosure Type	Description	UL Listing #	Dimensions
Flush Mount	F103 Arlington 3-Gang Non-Metallic Outlet Box	E170558	5.93” x 3.74” x 3.51”
Surface Mount	UL approved, NEMA Box with Clear Door and Light Gray Finish	E178096, UL94-V0, UL508	5.9” x 5.9” x 3.54”
Multi-Meter Unit	UL approved, NEMA electrical enclosure for 2-28 meter applications	E178096	sizes vary from; 14.56” x 10.64” x 5.92” to 28.9” x 21.1” x 7.1”

NOTE: When drilling wire feedthroughs on site, please ensure that the hardware is UL listed and the installation methods being used are approved as per local and national electrical code requirements and the manufacturers specifications. Take measures to maintain the weather proofing of the enclosures so as not to compromise the electrical components within.

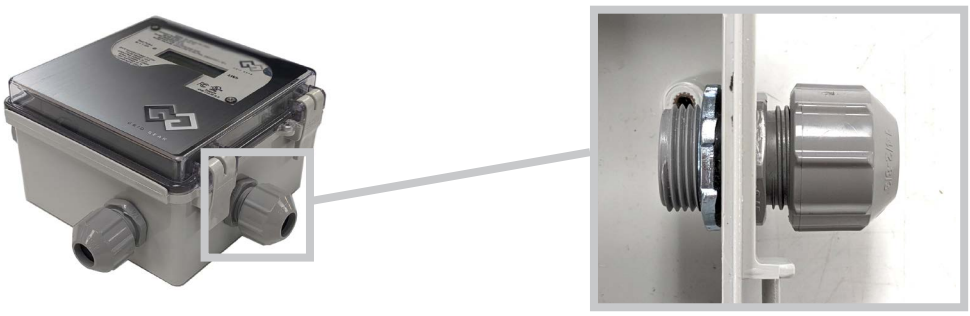

The CT inputs for Multi-Meter Units are located along a dual level terminal block in the middle of the enclosure. The upper level of the terminal block will receive the white CT leads and the lower level will receive the black CT leads. The terminal strip will designate phases A, B, and C.

In contrast, the CT inputs for meters that reside in Flush and Surface Mount enclosures will be located on the meter itself. Ports for the white and black CT leads are labeled ‘X1’ and ‘X2’ respectively.

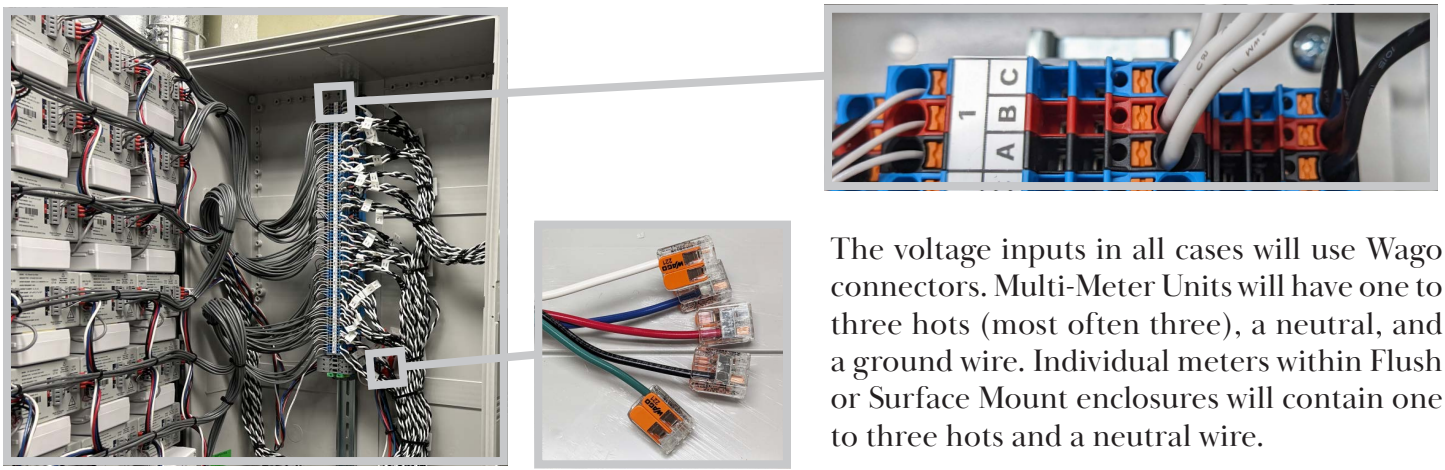

The voltage inputs in all cases will use Wago connectors. Multi-Meter Units will have one to three hots (most often three), a neutral, and a ground wire. Individual meters within Flush or Surface Mount enclosures will contain one to three hots and a neutral wire.

ENCLOSURES CONTINUED

It is important to supply ground to the ground terminal within an MMU cabinet in accordance with local and national electrical code requirements. GridGear is not liable for damage to the meter or personal injury caused by incorrect wiring.

CURRENT TRANSFORMERS

GG2 meters must be installed with UL XOBA/XOBA7 Listed Energy-Monitoring Current Transformers. GridGear supplies a line of UL Listed Current Transformers' rated for use with the GG2 meter. CTs should be securely fastened such that they will not slide down to live terminals.

WARNING: Any and all current transformers used in conjunction with the GG2 meter must have reinforced insulation. GridGear is not liable for damages that may result from installations that do not adhere to this requirement.

GridGear solid core CT

GridGear split core CT

XOBA Model ID	*Input Current*	*CT Core Type*	*Diameter of opening (inches | millimeters)*
ECO20-200	200A/100mA	Solid	0.768" | 19.5mm
ECO26-400	400A/100mA	Solid	1.024" | 26mm
ECO40-200	200A/100mA	Solid	1.57" | 39.9mm
ECO40-400	400A/100mA	Solid	1.57" | 39.9mm
ECO40-800	800A/100mA	Solid	1.57" | 39.9mm
ECSL24-200	200A/100mA	Split	0.945" | 24mm
ECSL24-400	400A/100mA	Split	0.945" | 24mm
ECSL40-200	200A/100mA	Split	1.57" | 39.9mm
ECSL40-400	400A/100mA	Split	1.57" | 39.9mm
ECSL55-800	800A/100mA	Split	2.16" | 54.9mm
ECSL80-1200	1200A/100mA	Split	3.15"| 80mm

WARNING: To reduce the risk of electric shock, always open or disconnect circuit from power-distribution system (or service) of building before installing or servicing current transformers.

CURRENT TRANSFORMERS CONTINUED

Please note that the current transformers that GridGear provides is intended to be installed by a qualified electrician as per the codes and laws of the local or national governing entities. The current transformers are not intended for connection to Class 2 equipment. Additional precautions include, but are not limited to;

- Always open or disconnect circuit from power-distribution system (or service) of building before installing or servicing current transformers.
- The current transformers may not be installed in equipment where they exceed 75% of the wiring space of any cross-sectional area within the equipment.
- Restrict installation of current transformers in an area where it would block ventilation openings.
- Restrict installation of current transformer in an area of breaker arc venting.
- Secure current transformer and route conductors so that the conductors do not directly contact live terminals or bus bars.
- If CT's are not terminated right away, short the CT leads until they are connected to the meter.
- Field-installed CT leads from switchgears/panel boards shall be reclassified as NFPA 70 and C22.1 Class 1 wiring

SUMMARY OF METERING CONVENTIONS

Electrical energy is calculated by the GG2 meter using inputs of (I) Current and (V) Voltage. The voltage inputs must be connected to the main supply lines that feed the load being metered.

The GG2 meter is **not suitable for Class 2 wiring methods** and is **not intended for connection to Class 2 equipment**. There shall be reliable segregation or separation by barriers between the following different circuits:

- Class 1 field and factory installed wiring (such as CT output leads, voltage measurement leads, mains input power), terminals, and uninsulated live parts; and
- Class 2 and Class 3 field installed and factory wiring, terminals, and uninsulated live parts.

The neutral and voltage terminal "A" must be connected in order to supply power to the meter. Suitably rated listed circuit breaker overcurrent protection must be used on all the line conductors.

The current transformer inputs on the back of the meter use Current Transformers (CTs) which are installed around the main conductors of the load being metered. A CT is not required on the neutral. Ensure that the CTs are rated for the peak current of the load and that the semiconductors cannot exceed 100mA.

Both inputs (V, I) must come off the same phase leg and, when using the GridGear current transformers, the arrow on the installed CTs must point towards the load. The input leads of the CTs must also be connected to the corresponding phases on the meter terminal blocks. The meter will not perform properly if polarity and phase association is not observed.

The "Pulse Output" and 3.3V (25 mA max) terminals on the GG2 meter are intended for the connection of third party pulse output and 3.3V collecting equipment.

Once all of the connections are made and the meter is operational, it is recommended that a seal is used by the installer to lock the lid to the main enclosure in order to protect it from tampering. We recommend a lead crimp seal and some stranded wire for this step, however, you may use your own method as long as it is tamper resistant and conforms to local regulations.

Please refer to the connection diagram for different service configurations and do not hesitate to contact us with any questions or inquiries by emailing info@gridgear.ca

CONNECTION DIAGRAMS

SINGLE-PHASE TWO-WIRE CONNECTION

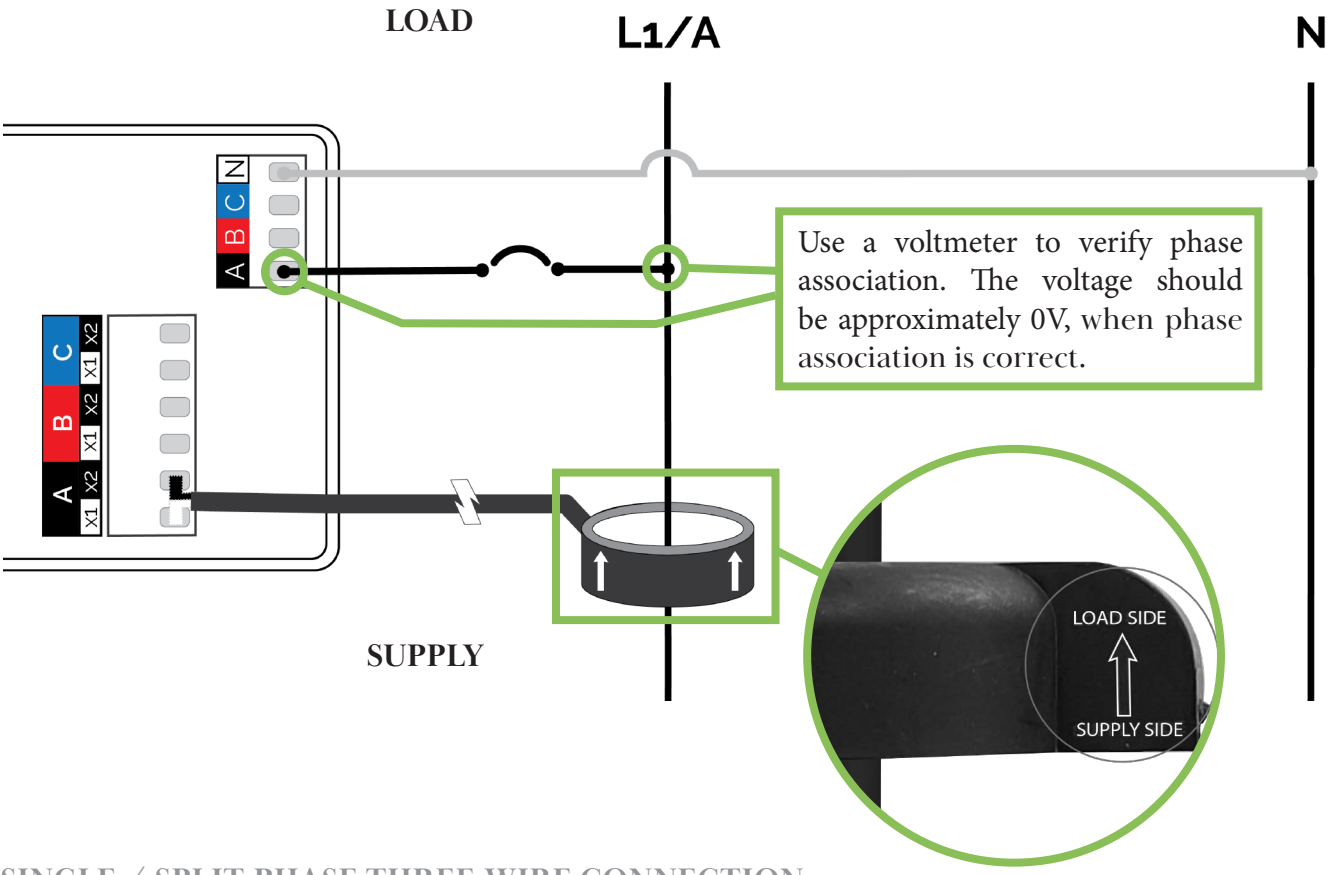

SINGLE / SPLIT-PHASE THREE-WIRE CONNECTION

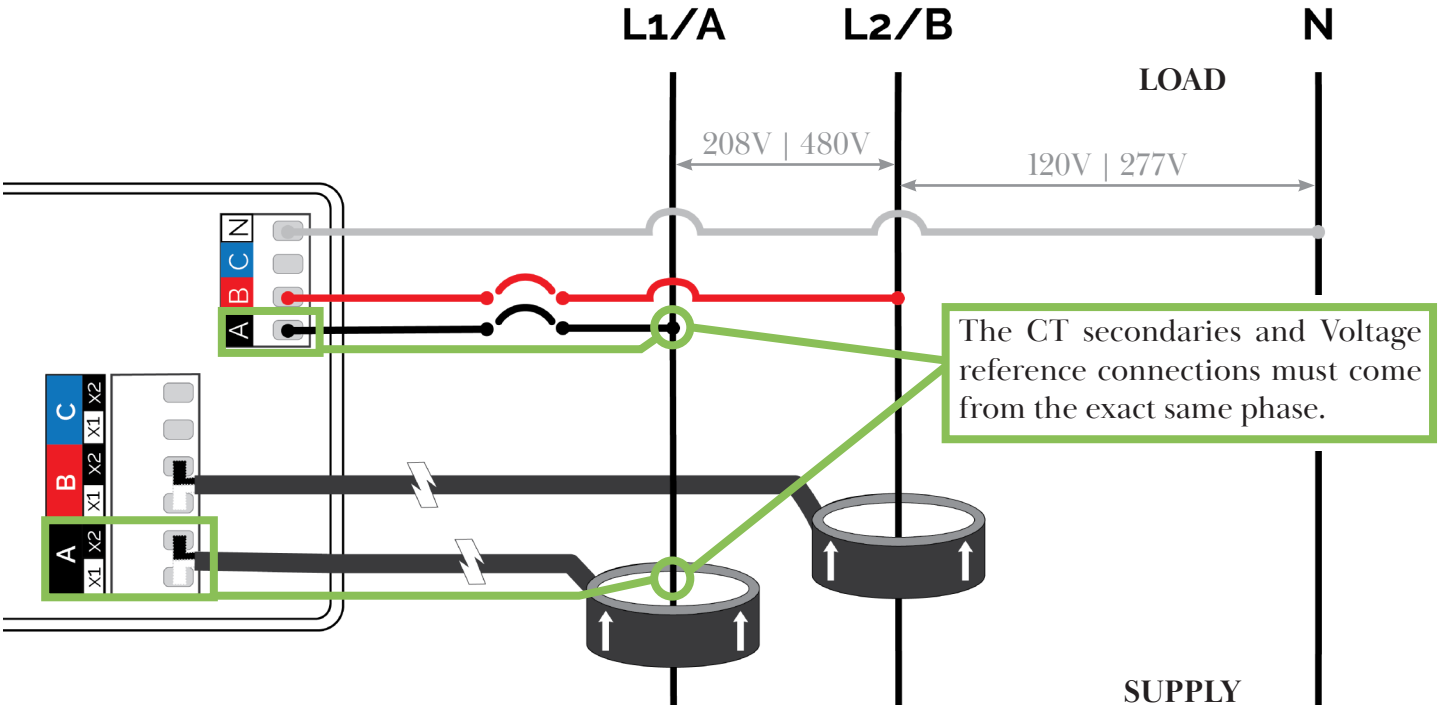

THREE-PHASE FOUR-WIRE CONNECTION

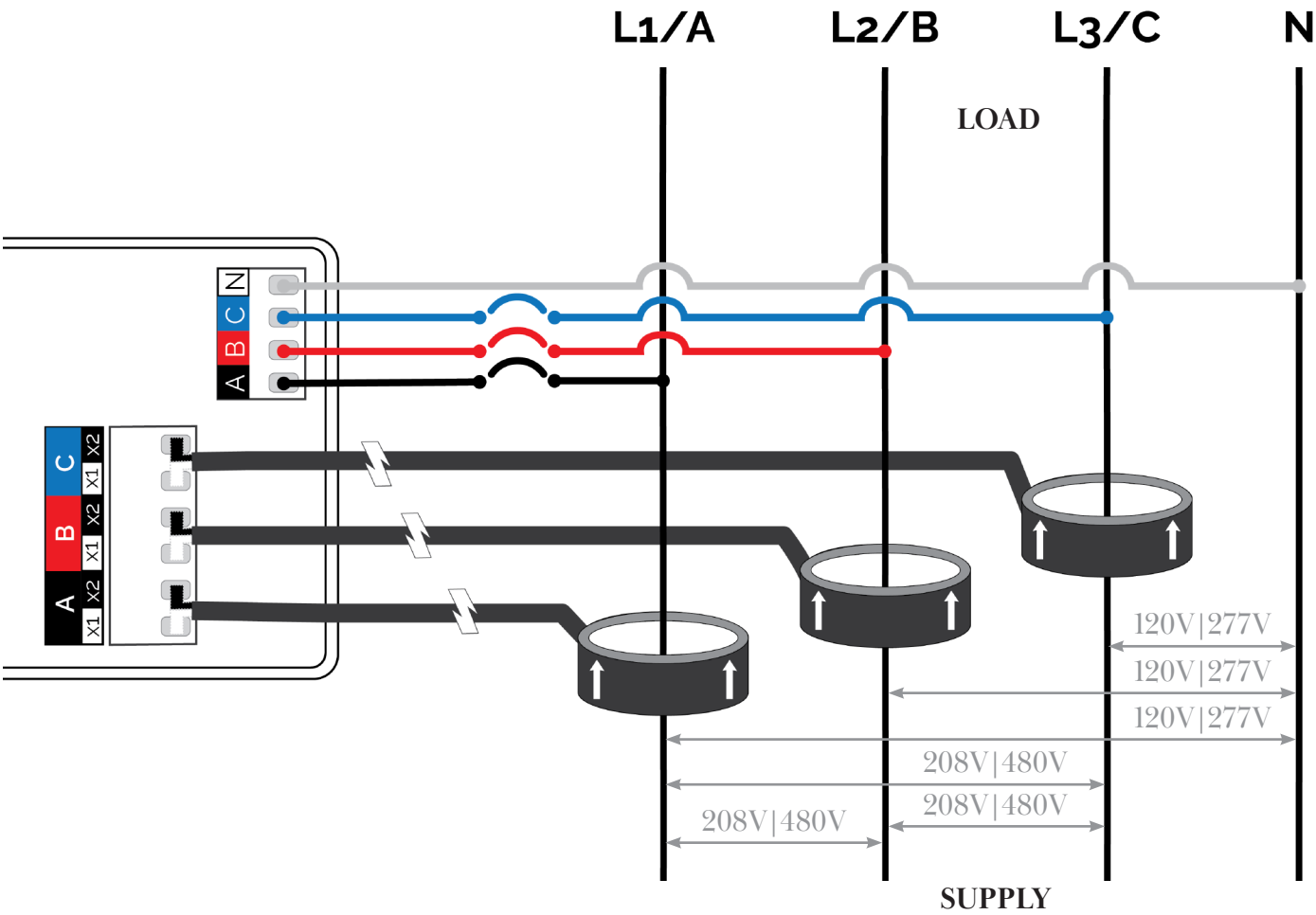

*****VOLTAGE INPUTS "A" AND NEUTRAL "N" SUPPLY POWER TO THE METER*****

NOTE: Many residential installations in three-phase panels will only meter 2 hot feeders per apartment or load. Phases on a breaker or distribution panel do not always follow the sequence A, B, C. Some will have conductors in the order of (A, B), (B, C), (A, C) or feature other variations. Though we use the letters A, B, and C to identify the respective phases on the meter, the breaker panel may follow a different pattern.

It is a good practice to verify the phase of each conductor with a voltmeter; going from the breaker to the incoming conductor. A reading of approximately 0V will indicate that the breaker and conductor are in the same phase. If the breaker and conductor are on different phases, the voltmeter will read approximately 208V or 240V or 480V. Any phase line to neutral will read approximately 120V or 277V. Label each conductor in order to reduce the likelihood of connecting a voltage lead or current transformer to the incorrect phase.

A disconnecting device such as a switch, or circuit breaker, must be installed;

- The switch or circuit breaker must have a maximum rating of 20A or as required by local electrical code.
- The switch or circuit breaker must be marked as the disconnecting device for the meter.
- It is recommended that the meter be mounted near the disconnecting device in an area with adequate ventilation.
- The disconnect should not be positioned in a manner that makes it difficult to operate the disconnecting device.

EXAMPLE MMU INSTALLATION

1. Choose a location to mount the Multi-Meter Unit (MMU) near to the distribution panel that the meters will be monitoring.

2. Run a conduit between the MMU and the panel to make the necessary connections. In the examples shown, the MMUs are mounted with conduits for the CT wires and voltage leads to travel through. The installer should use their best judgement with regards to size, placement and number of conduits required.

3. Install or use a 1/2/3 pole breaker to run voltage to the MMU. GridGear recommends using #14 AWG (American Wire Guage), insulated for 600 VAC (Volts Alternating Current) for the voltage reference leads when installing Multi-Meter Units. Voltage reference leads in excess of 20ft or 6m in length may require a thicker guage to mitigate voltage drop. Connect the voltage reference leads from each hot phase of the breaker to their corresponding voltage ends inside the MMU.

Label the breaker that feeds the MMU on the distribution panel.

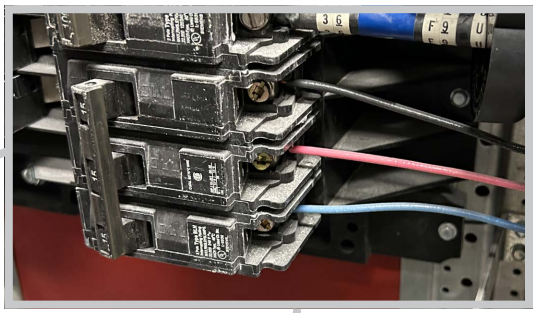

The wires connected to the three pole breaker in this example are color coded to the three phases. These colors are consistent with the color coding on the GG2 meter.

Black corresponds with **Phase A**
Red corresponds with **Phase B**
Blue corresponds with **Phase C**

4. Connect the neutral wire from the neutral bar and run it to the white neutral connection on the MMU. Ensure the **Neutral Only** wire tag is removed from the wago connection before inserting the neutral wire.

5. Use a voltmeter to verify that the connections between the distribution panel and the breaker (shown on the right), as well as the connections between the breaker and the MMU voltage inputs (shown below), are in phase.

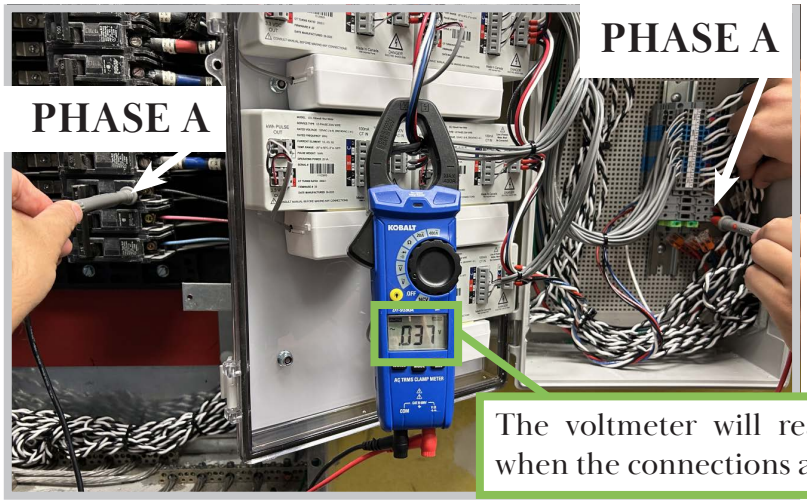

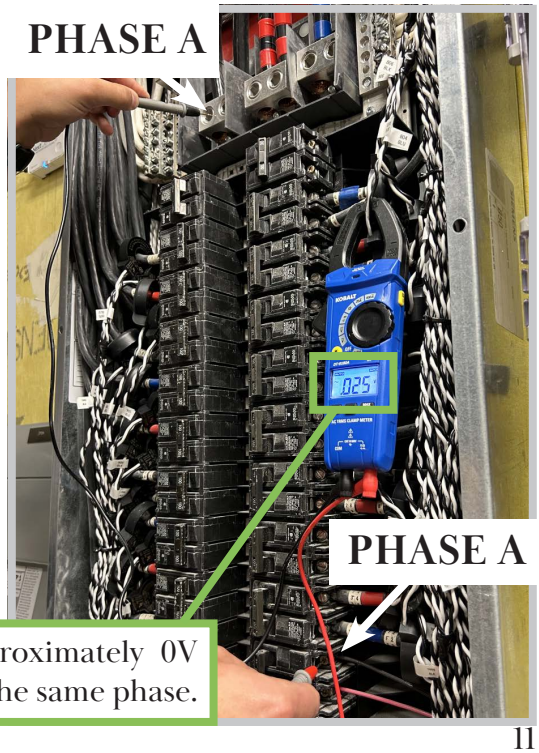

The voltmeter will read approximately 0V when the connections are on the same phase.

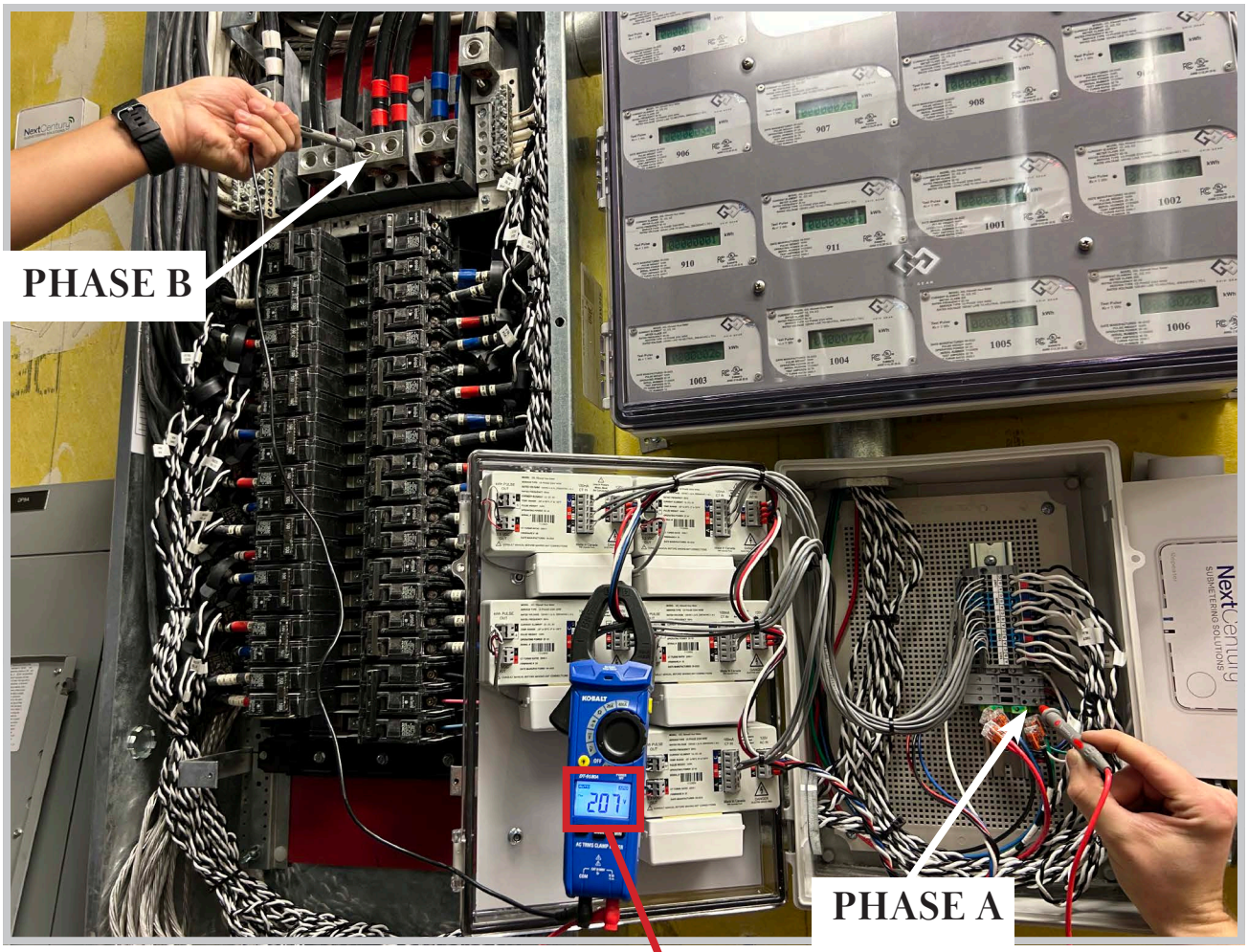

The voltmeter will read approximately 208V (or 480V in 277V/480V systems) if the connections are not on the same phase.

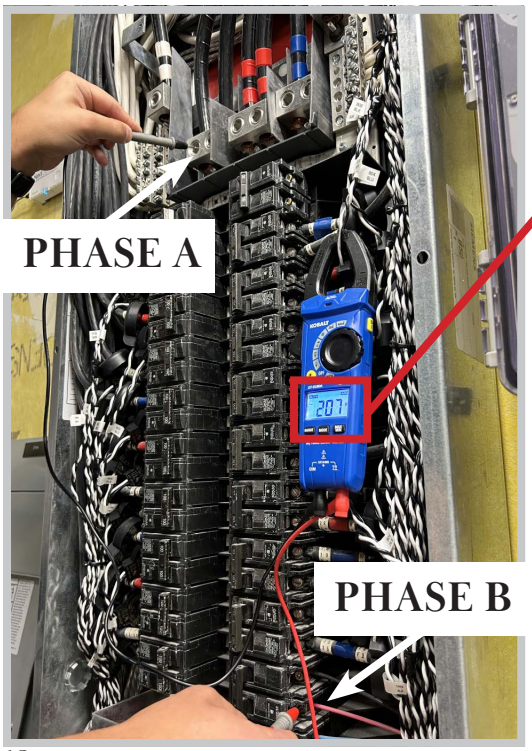

If the connections between the distribution panel, breakers, and MMU are not in phase, then the GG2 meters will not function properly. The result will lead to the meters displaying a lower than expected or inaccurate accumulation.

To help prevent phase association errors, it is a good practice to test and label every breaker in the distribution panel before connecting the GG2 meters.

NOTE: The order in which breakers are arranged in a panel may differ from the examples pictured here. They may be installed in a different order than (A, B, C), (A, B, C).

6. Install the current transformers onto the load conductors running to the dwellings.

Phase association errors can also be attributed to current transformers being installed on the wrong load conductor, or in the wrong orientation. A good practice to prevent this type of error during installation is to label every CT lead with its affiliated meter or unit number and its designated phase. Both ends of the CT leads, those that land in the distribution panel and those that land in the MMU have been labelled as described in the examples pictured below.

NOTE: In a 3 phase 4 wire distribution panel, CTs will alternate between (A, B), (B, C), and (C, A) phases.

GridGear's solid core CTs, depicted here, should be oriented with their arrow pointing towards the load.

Use a voltmeter to verify the phase of each of the load conductors against the supply conductors, taking steps to label or mark them with tape. Doing so will decrease the likelihood of making phase association errors.

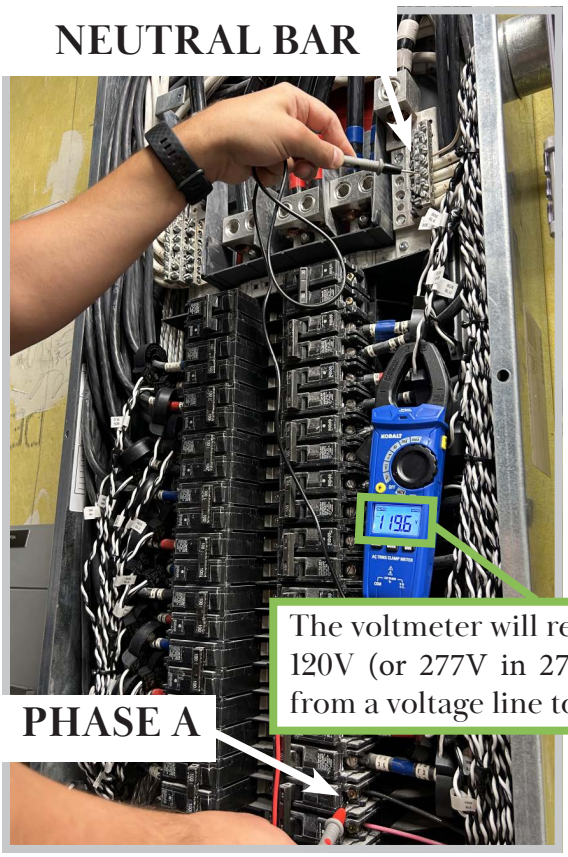

The voltmeter will read approximately 120V (or 277V in 277V/480V systems) from a voltage line to neutral.

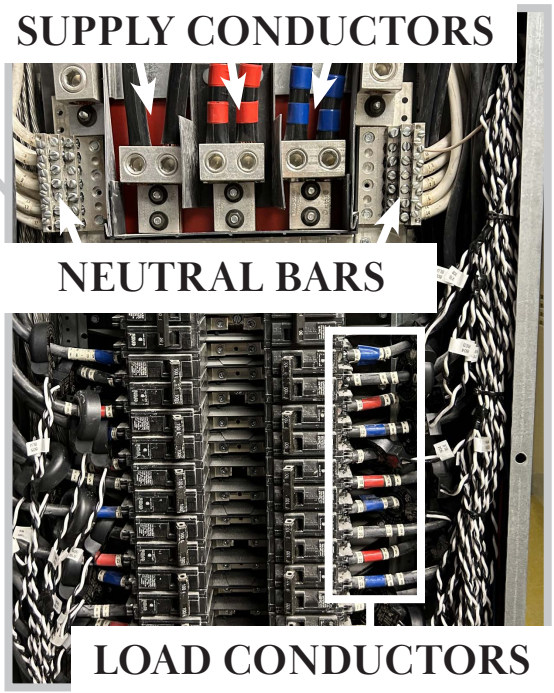

7. Run the CT leads to the appropriate MMU cabinet.

WARNING: Do not return power to the distribution panel prior to terminating the CT leads.

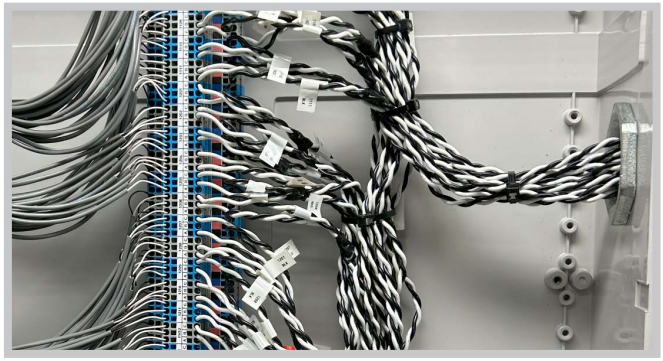

8. Terminate the CT leads to the corresponding tagged unit and phase on the din rail terminals. Ensure that the white leads connect to the top level and the black leads to the bottom level of the double level terminal block. Press down on the orange tabs of the terminal block in order to open its ports. Make sure that the insulation is not preventing the wire from making contact.

   NOTE: If shortening the CT leads, the ideal stripped insulation length is 3/8” or 9.5mm.

9. Once all connections have been completed, the distribution panel may be turned on and the GG meters will power up. The **Test Pulse** LED light will blink at least once if there is a load being monitored. The installer may choose to turn on a few loads in the dwelling in order to increase the blink frequency, and confirm that the meters have been installed correctly.

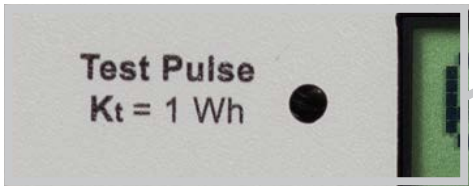

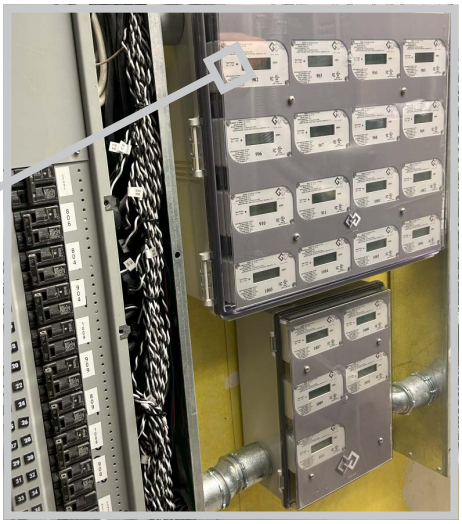

EXAMPLE FLUSH AND SURFACE MOUNT INSTALLATION

Flush Mount enclosures will often be installed within the suite or unit they are monitoring, as opposed to an electrical room. Though the examples shown illustrate a Flush Mount installation, the same principals can be applied to Surface Mount enclosures.

1. Begin the installation by removing the breaker panel cover. Make sure that all related circuits are de-energized.

2. Locate and install the supplied flanged 3 gang enclosure close to the suite sub-panel. The current transformers that GridGear supplies have wire leads that measure 12 ft, or 4 m, in length.

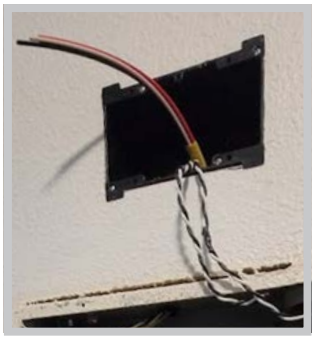

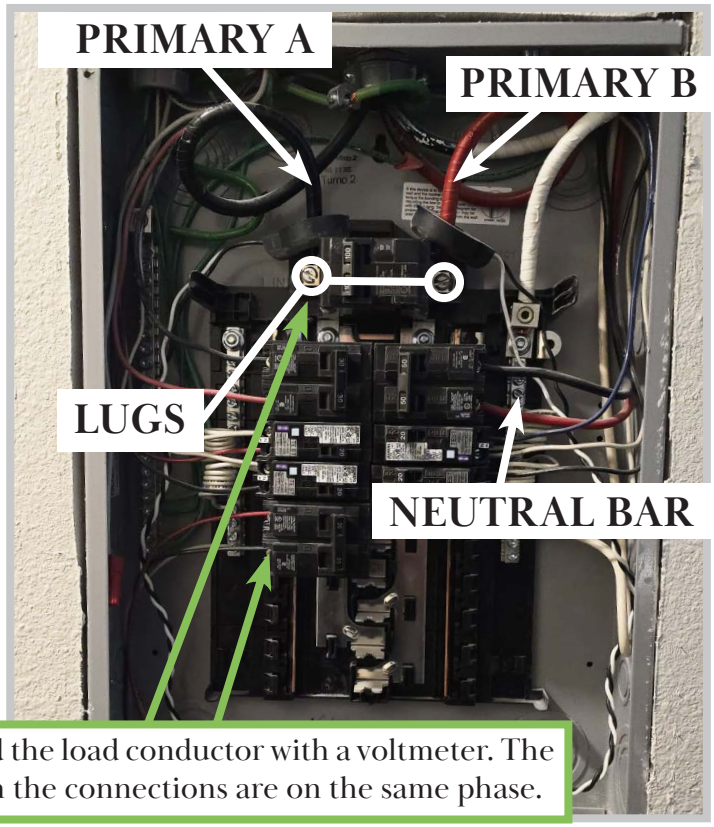

Probe the lug of the primary conductor and the load conductor with a voltmeter. The voltmeter will read approximately 0V when the connections are on the same phase.

3. Verify the phase of each primary conductor with a voltmeter. The voltmeter will read approximately 0V if the connections are on the same phase.

4. Connect the voltage reference wires to the lugs of the same phase. In cases where the lug is unavailable the installer may use a 1/2/3 pole breaker to run voltage from each hot phase. Run the voltage reference wires to the enclosure.

5. Connect the neutral wire to the neutral bar and run it to the enclosure.

6. Disconnect the primaries from the lugs. Ensure that the system is de-energized.

7. If applicable, remove the old CTs and install Gridgear's CTs with correct polarity. The CTs must be installed in the appropriate orientation; with respect to the current flow indicated on the CT itself. With GridGear CTs, the arrow on the CT should point towards the load side.

NOTE: If the CTs are not oriented correctly, the meter will not provide accurate readings.

8. Reconnect the primaries to the lugs.

9. Label the CT leads with respect to their associated phase and run them to the enclosure.

10. Hang the GG meter from the 3 gang box for ease of wiring.

11. Connect the voltage reference wires to their respective phases on the **120V AC IN** terminal. Connect the Neutral wire to the Neutral tail. Suitably rated Listed circuit breaker overcurrent protection must be used on all the line conductors.

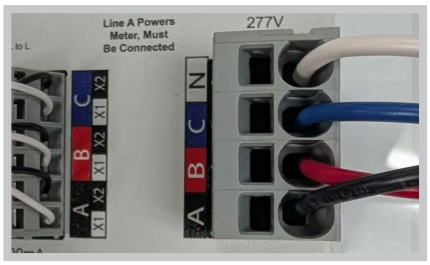

> **NOTE:** Voltage input A and Neutral input N must be connected in order to supply power to the GG2 meter.

12. Connect the CT leads to the **100mA CT IN** terminals. Make sure that CT A is connected to terminal A, CT B with terminal B, and so on. Make sure that the colors of the leads match the white X1 and black X2 orientation.

All terminals on the the GG2 meter can be levered open with the tool provided, or with a small flat head screw driver from the topmost opening.

13. Place the radio behind the meter within the available space of the enclosure. Then close the unit by flipping the panel and attaching it to the front of the 3 gang enclosure.

If a radio is included in the kit, it will often be adhered with velcro to the lid of the Surface Mount enclosure. Whereas a radio included in a Flush Mount enclosure will be connected solely via its wiring.

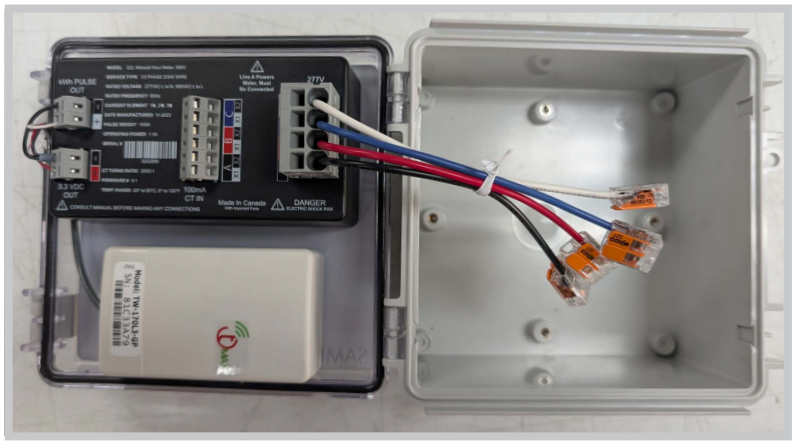

14. Turn the power from the associated breaker on. The GG2 meter will power up. The **Test Pulse** LED light will blink at least once if there is a load being monitored. The light will continue blinking depending on the load being monitored. The installer may choose to turn on a few loads in the dwelling in order to increase the blink frequency, and confirm that the meter has been installed correctly.

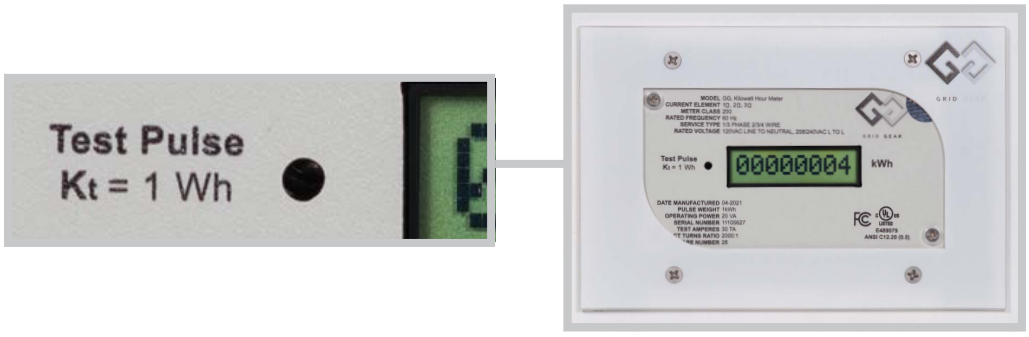

TROUBLESHOOTING

No preventive maintenance is required on any of the equipment. If the product has not been properly installed this section lists symptoms that may occur as a result. These symptoms can be identified and resolved as follows;

PROBLEM #1 - THE METER DOES NOT TURN ON

Step 1: Ensure voltage line A and the Neutral line are properly connected, as they power the meter.

Step 2: Ensure voltage line A is energized and that the breaker has been flipped on for the voltage reference.

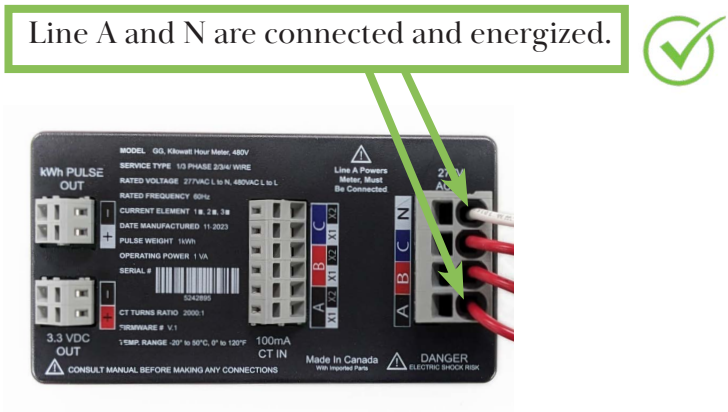

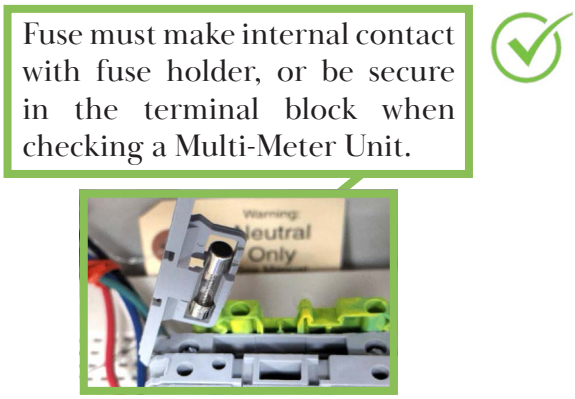

Step 3: Ensure that the fuses, especially the fuse block that feeds line A, is making contact with the fuse holder inside of the MMU.

PROBLEM #2: METER IS ON, BUT NOT ACCUMULATING (kWh TEST PULSE ON THE FACE IS NOT BLINKING)

Step 1: Check if there is current on the load conductor. The meter will not accumulate if there is no load.

Step 2: Check all voltage and CT wire connections to ensure the wires are making contact with the terminal blocks. Pull gently on each wire to check that they are installed firmly.

Step 3: Ensure that each voltage phase is connected to the appropriate terminal on the meter.

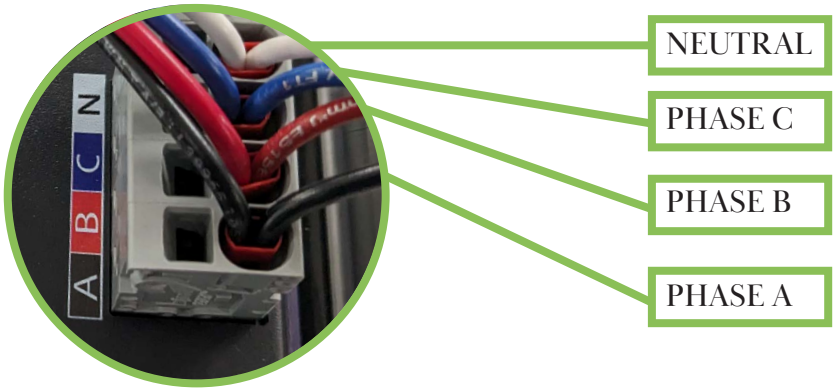

Step 4: Ensure that the Current Transformers are installed on the same phase as the voltage reference. (A on A, B on B, and C on C)

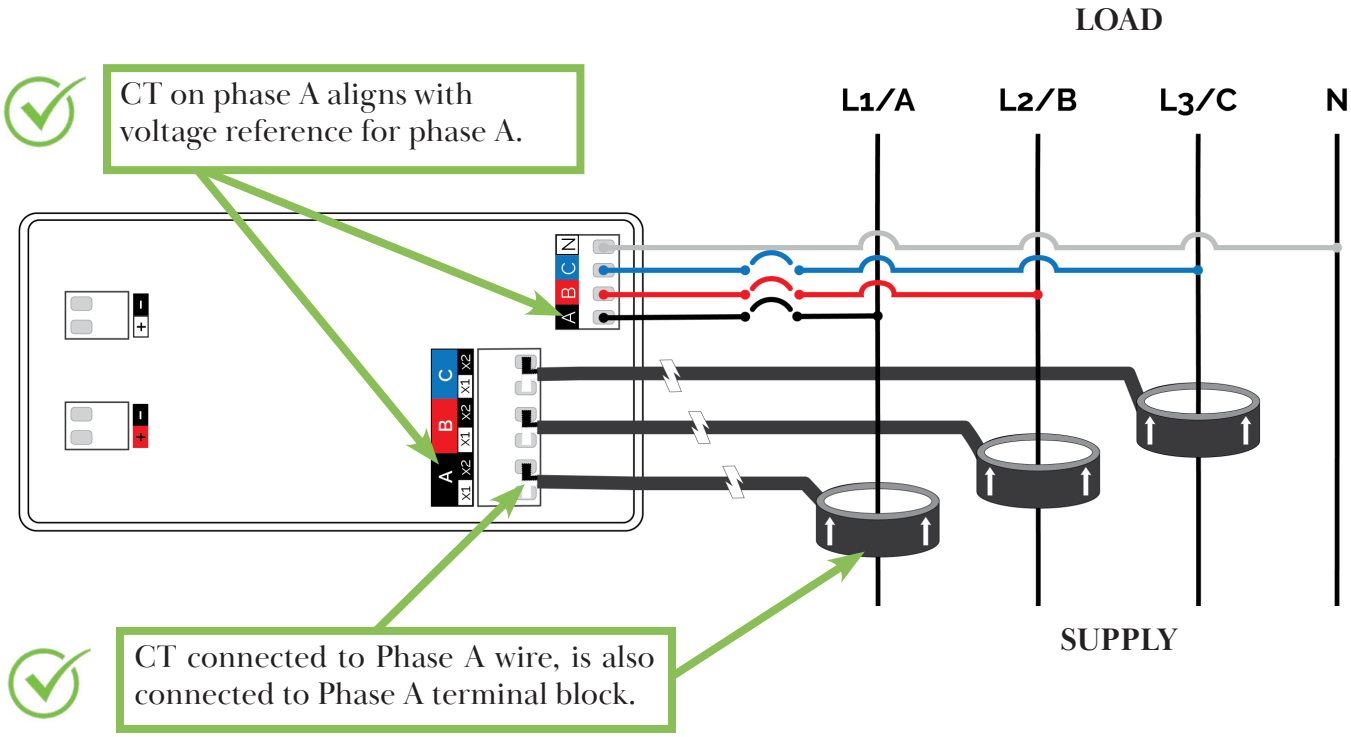

Step 5: Ensure CT terminations are correctly aligned. For GridGear supplied CTs: White wire must be connected to X1; black wire must be connected to X2. If the leads are connected to a dual level terminal block inside an MMU, the white wire must be connected to the top level and the black wire must be connected to the bottom level.

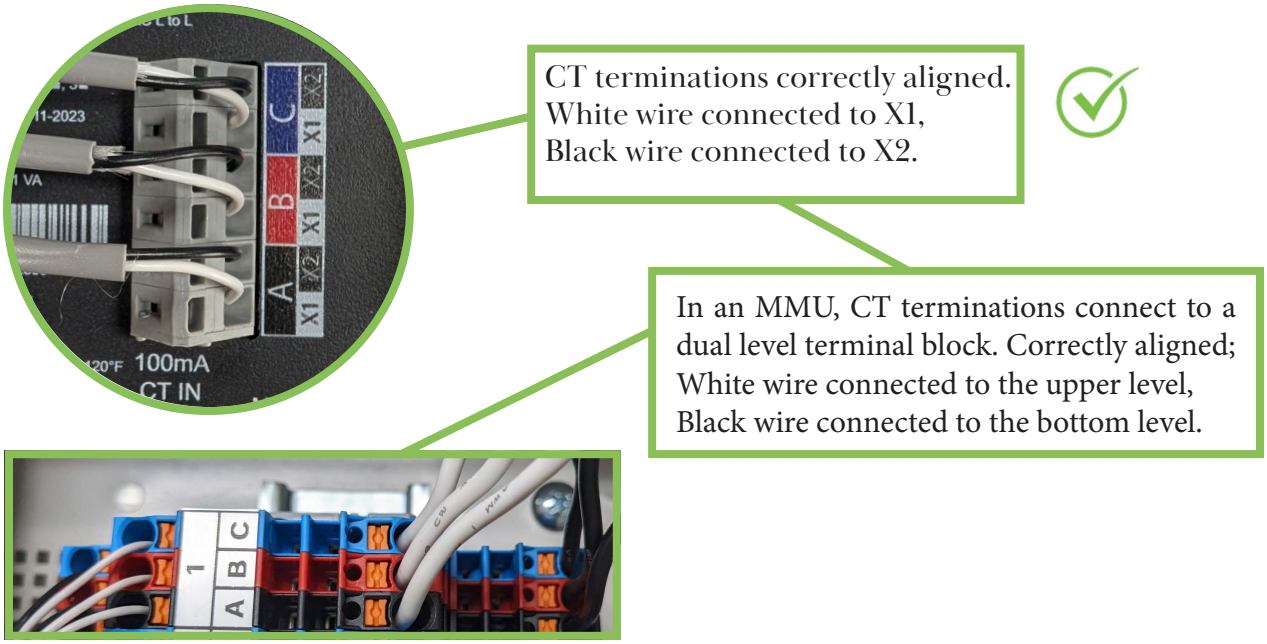

Step 6: Check CTs for proper polarity, ensuring they are aligned correctly to the load side and supply side. Note the arrow on the GridGear CTs, which points towards the load side.

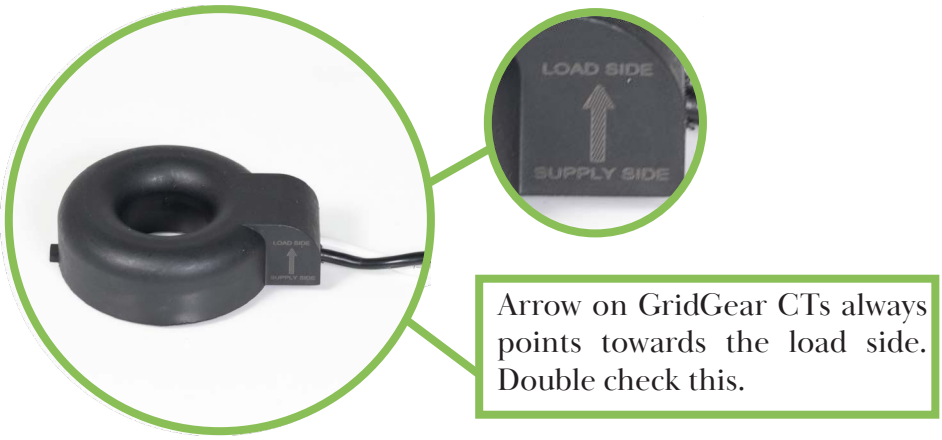

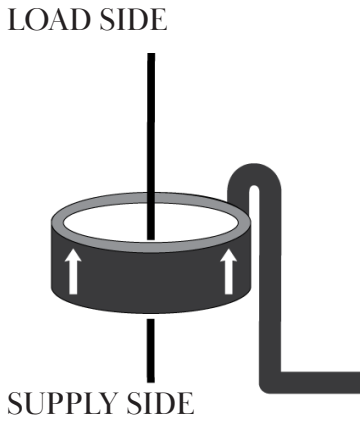

PROBLEM #3 - METER IS ON AND ACCUMULATING, BUT THE TRANSCEIVER IS NOT COLLECTING PULSES.

Step 1: Check the transceiver wire connections to ensure the wires are suitably connected with the terminal blocks. Give all the wires a light tug to test this.

Step 2: Check the transceiver wire connections to ensure each colored wire is connected to the proper terminal. In addition, check the connections on the radio.

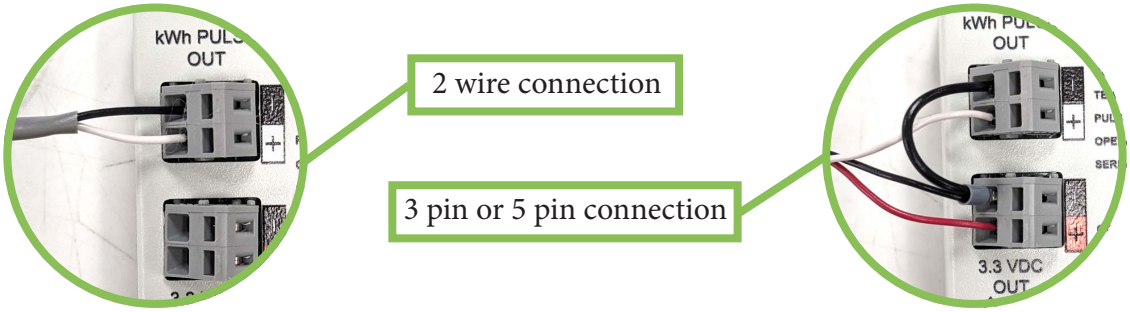

Step 3: If the transceiver is still not collecting pulses, please contact GridGear for further assistance via email at info@gridgear.ca

NOTE: It requires 1000 LED flashes/blinks on the meter before the pulse output terminal generates 1 kilowatt hour pulse on the display.

- ***WHY DOES THE METER SHOW ACCUMULATION WHEN IT IS FIRST INSTALLED?***

All of our meters undergo quality control processes which require a minimal amount of use. Therefore when the meters are powered on, they will typically show a small accumulation on their LCD display as their initial meter read.

- ***HOW DO I TURN THE METER ON?***

The meter will receive power when it is installed correctly and energized; there is no power button on the meter. The GG meter receives power from voltage input "A" and neutral "N" connections.

- ***HOW DO I OPEN UP THE METER?***

The meter is not designed to be opened, altered or tampered with in any way. If you suspect that the interior components of the meter are malfunctioning, it is best to contact our customer support.

- ***WHAT SIZE WIRE SHOULD I USE FOR THE LINE VOLTAGE LEADS?***

The recommended gauge is #14 AWG for an MMU. For a single meter, #18 AWG is also acceptable. This will provide the best performance and highest degree of accuracy when used in conjunction with the GG meters. The length should not exceed 20 ft, or 6 m, so as to keep voltage drop to a minimum. If unsure about the extent to which these decisions will effect accuracy, you may consult GridGear directly by contacting our support staff at info@gridgear.ca

- ***WHY IS IS THE METER READING INACCURATE?***

If the displayed accumulation does not match your expectations then an error may have been made during the installation. Oftentimes, the issue is the result of CT or voltage leads being connected to the incorrect phase. Please consult the previous section or the installation guides located at the end of this document. The GG meter is built to 0.5% accuracy and tested beyond that standard before being allocated.

- ***WHY DOESN'T THE TEST PULSE LIGHT BLINK ?***

There are two possibilities; either the amperage from the affiliated unit is too low and the light is not blinking with sufficient frequency to be noticeable. Or there is an issue with the installation, and the CT leads are connected incorrectly.
Increasing the load of power being monitored by, for example, turning on more appliances will increase the test pulse light frequency. If the issue persists, review the troubleshooting steps on page 17-19 of this manual.

- ***WHAT IF I HEAR A POP AND IT SMELLS LIKE SOMETHING IS BURNING?***

Contact the supplier of your meter or our support staff at info@gridgear.ca in order to discuss next steps and determine viable solutions.

GRIDGEAR SOLUTIONS LTD. PRODUCT WARRANTY

GridGear Solutions Ltd. ("GridGear") warrants its products to be free of defects in materials and workmanship under normal and proper use for ten (10) years from the manufacture date. The products with the following model numbers are the GridGear products that are subject to this ten (10) year warranty:

- Model **GG2**, GridGear's single channel digital meter
- Model **ECO20-200**, GridGear's XOBA 200A/100mA solid core current transformer
- Model **ECO26-400**, GridGear's XOBA 400A/100mA solid core current transformer
- Model **ECO40-200**, GridGear's XOBA 200A/100mA solid core current transformer
- Model **ECO40-400**, GridGear's XOBA 400A/100mA solid core current transformer
- Model **ECO40-800**, GridGear's XOBA 800A/100mA solid core current transformer
- Model **ECSL24-200**, GridGear's XOBA 200A/100mA split core current transformer
- Model **ECSL24-400**, GridGear's XOBA 400A/100mA split core current transformer
- Model **ECSL40-200**, GridGear's XOBA 200A/100mA split core current transformer
- Model **ECSL40-400**, GridGear's XOBA 400A/100mA split core current transformer
- Model **ECSL55-800**, GridGear's XOBA 800A/100mA split core current transformer
- Model **ECSL80-1200**, GridGear's XOBA 1200A/100mA split core current transformer

GridGear's only obligation is to correct such defects by repair or replacement, at its option, within the warranty period. Products returned must be shipped freight prepaid. This warranty excludes and there is disclaimed liability for labor for removal of this product or reinstallation.

This warranty does not cover:

Damage caused by: transport, installation, storage, misuse, abuse, modification, installation errors, alteration, theft, vandalism, repair by unauthorized personnel, power outages, surges or disruptions, natural events, acts of God, exposure to excessive temperatures or use in any manner contrary to the intended purpose, instructions, or labels. In addition, misuse, abuse, modification or alteration by the customer or its agents will void this warranty in its entirety.

Any related labour costs, damage caused by the warranted part, removal or installation fees, costs for removal of defective components or for the installation of replacement parts.

This warranty will not be modified or extended. GridGear does not authorize any person or entity to act on its behalf to modify or extend this warranty. This warranty applies only to GridGear products with the model numbers listed in this document. In no event shall GridGear be liable for (i) any direct damage or loss whatsoever caused by installation, connection, use or malfunction of accessories or attachments of other manufacturers, or (ii) any indirect, incidental, or consequential damage or loss whatsoever, including but not limited to, loss of use, income or profit, loss of data, interruption of business, and any claim made by the purchaser's customers or any other person or entity.

This is the sole and exclusive warranty of GridGear products, and GridGear makes no other representations or warranties, either express or implied, including but not limited to any implied warranty of merchantability, fitness for intended use or noninfringement regarding its products.

For warranty information and/or product returns contact GridGear in writing, or via email at info@gridgear.ca

GridGear Solutions Ltd., Unit 340, 17 Fawcett Rd. Coquitlam, BC V3K 6V2